# 17. 04. 2015. K1

① Дигитални систем управљања дат је на слици.

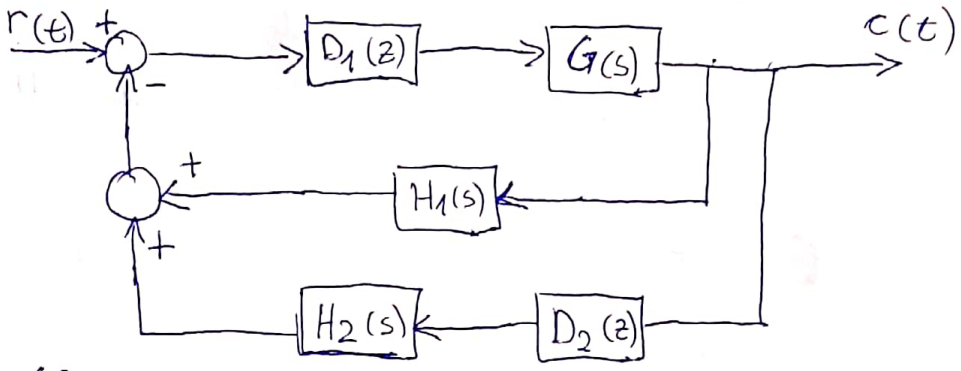


a) Одредити мјесто(а) гдје је потребно поставити одабирач(е) и ~~колу~~ (а) задршке нултог реда.

b) Одредити ф-ју дискретног преноса.

РЈЕШЕЊЕ:

a)

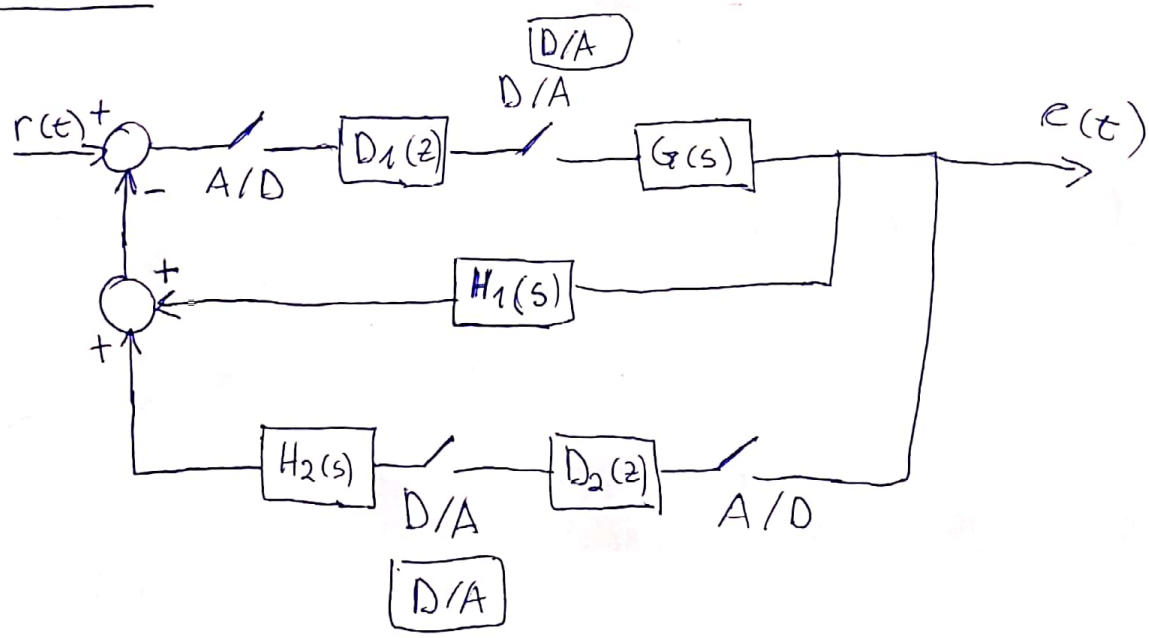


или

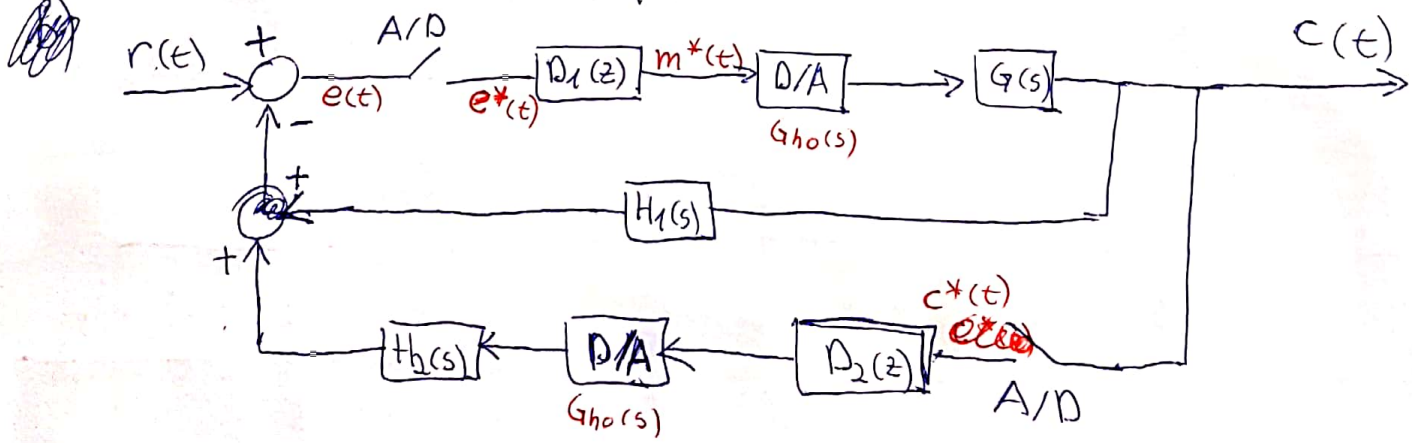


Scanned with Cam

b) $C(s) = G_{ho}(s) \cdot G(s) \cdot M^*(s) \underset{TA\Phi\Pi\Pi}{\Longrightarrow} C^*(s) = G_{ho} G^*(s) \cdot M^*(s)$

$M^*(s) = D_1(z) \cdot E^*(s)$

$C^*(s) = G_{ho} G^*(s) \cdot D_1(z) \cdot E^*(s) \;/ Z \Rightarrow C(z) = G_{ho} G(z) \cdot D_1(z) \cdot E(z)$

$E(s) = R(s) - [H_1(s) \cdot C(s) + H_2(s) \cdot G_{ho}(s) \cdot D_2(z) \cdot C(z)]$

$C(s) = G_{ho}(s) \cdot G(s) \cdot D_1(z) \cdot E(z)$

$E(s) = R(s) - H_1(s) \cdot G_{ho}(s) \cdot G(s) \cdot D_1(z) \cdot E(z) - G_{ho}(s) \cdot H_2(s) \cdot D_2(z) \cdot C(z)$

$E(z) = R(z) - G_{ho} G H_1(z) \cdot D_1(z) \cdot E(z) - G_{ho} H_2(z) \cdot D_2(z) \cdot C(z)$

$E(z)[1 + G_{ho} G H_1(z) \cdot D_1(z)] = R(z) - G_{ho} H_2(z) \cdot D_2(z) \cdot C(z)$

$C(z) = G_{ho} G(z) \cdot D_1(z) \cdot E(z) \;/ \cdot (1 + G_{ho} G H_1(z) \cdot D_1(z))$

$C(z)[1 + G_{ho} G H_1(z) \cdot D_1(z)] = G_{ho} G(z) \cdot D_1(z) \cdot E(z)[1 + G_{ho} G H_1(z) \cdot D_1(z)]$

$C(z)[1 + G_{ho} G H_1(z) \cdot D_1(z)] = G_{ho} G(z) \cdot D_1(z) [R(z) - G_{ho} H_2(z) \cdot D_2(z) \cdot C(z)]$

$\cancel{C(z)[1 + G_{ho} G H_1(z) \cdot D_1(z) + G_{ho} H_2(z) \cdot D_2(z)]}$

$C(z)[1 + G_{ho} G H_1(z) \cdot D_1(z) + G_{ho} G(z) \cdot D_1(z) \cdot G_{ho} H_2(z) \cdot D_2(z)] =$

$= G_{ho} G(z) \cdot D_1(z) \cdot R(z)$

$$\boxed{\frac{C(z)}{R(z)} = \frac{G_{ho} G(z) \cdot D_1(z) \cdot R(z)}{1 + G_{ho} G H_1(z) \cdot D_1(z) + G_{ho} G(z) \cdot D_1(z) \cdot G_{ho} H_2(z) \cdot D_2(z)}}$$

Scanned with Car

2. Читавом систем управљања дат је на слици.

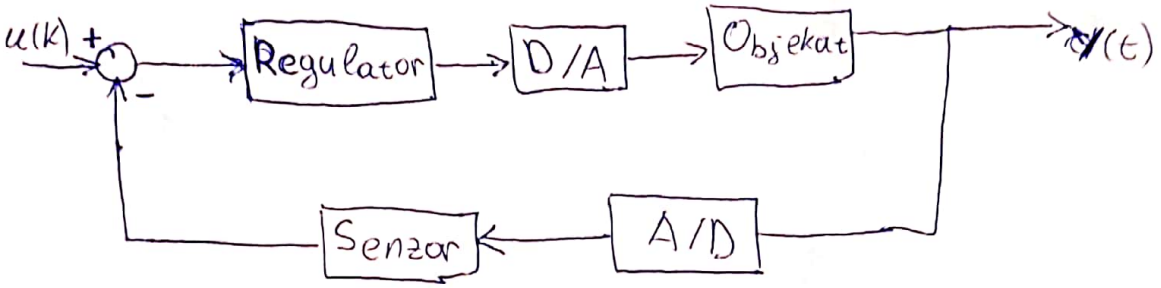


Израчунати ф-ју дискретног преноса ако је регулатор представљен ј-ном $x(kT) = 5e(kT)$, објекат управљања са $G_0(s) = \frac{10}{s+1}$, а сензор са $M(z) = \frac{z}{z-0.0368}$. Периода одмјеравања је $T = 1[s]$.

РЈЕШЕЊЕ:

Регулатор: $x(kT) = 5e(kT) \,/\, Z \Rightarrow X(z) = 5E(z) \Rightarrow D(z) = 5$

Објекат управљања: $G_0(s) = \frac{10}{s+1}$

Сензор: $M(z) = \frac{z}{z-0.0368}$

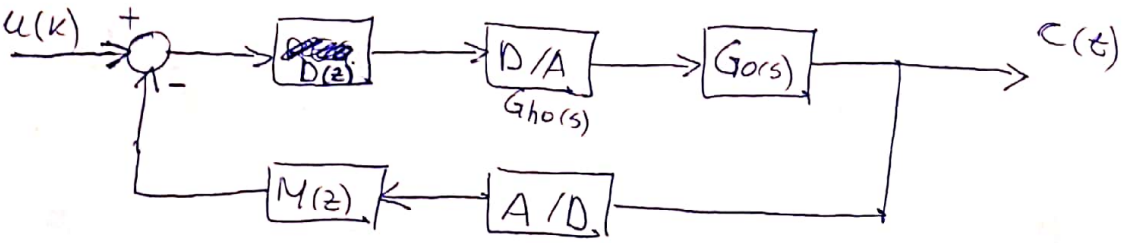


$$Y(s) = D(z) \cdot G_{ho}(s) \cdot G_0(s) \cdot E^*(s) \xrightarrow[\text{ТАФДП}]{}$$

$$Y^*(s) = D(z) \cdot G_{ho} G_0^*(s) \cdot E^*(s) \,/\, Z \Rightarrow Y(z) = D(z) \cdot G_{ho} G_0(z) \cdot E(z)$$

$$E(s) = U(s) - M(s) \cdot Y^*(s) \xrightarrow[\text{ТАФДП}]{} E^*(s) = U^*(s) - M^*(s) \cdot Y^*(s) \,/\, Z$$

$$\Rightarrow E(z) = U(z) - M(z) \cdot Y(z)$$

Scanned with Car

$$Y(z) = D(z) \cdot G_{ho} G_o(z) \cdot E(z) = G_{ho} G_o(z) \cdot D(z) \cdot \left[ U(z) - M(z) \cdot Y(z) \right]$$

$$Y(z) = G_{ho} G_o(z) \cdot D(z) \cdot U(z) - G_{ho} G_o(z) \cdot D(z) \cdot M(z) \cdot Y(z)$$

$$Y(z) \left[ 1 + G_{ho} G_o(z) \cdot D(z) \cdot M(z) \right] = G_{ho} G_o(z) \cdot D(z) \cdot U(z)$$

$$Y(z) = \frac{G_{ho} G_o(z) \cdot D(z)}{1 + G_{ho} G_o(z) \cdot D(z) \cdot M(z)} \cdot U(z)$$

$$G(z) = \frac{Y(z)}{U(z)} \Rightarrow \boxed{G(z) = \frac{G_{ho} G_o(z) \cdot D(z)}{1 + G_{ho} G_o(z) \cdot D(z) \cdot M(z)}}$$

$$G_{ho} G_o(z) = Z\left\{ \frac{1 - e^{-sT}}{s} \cdot \frac{10}{s+1} \right\} = (1 - z^{-1})\, Z\left\{ \frac{10}{s(s+1)} \right\}$$

$$\frac{10}{s(s+1)} = \frac{A}{s} + \frac{B}{s+1} = \frac{As + A + Bs}{s(s+1)} \Rightarrow \begin{array}{l} A + B = 0 \\ A = 10, \; B = -10 \end{array}$$

$$G_{ho} G_o(z) = \left(1 - \frac{1}{z}\right) Z\left\{ \frac{10}{s} - \frac{10}{s+1} \right\} = 10 \cdot \frac{z-1}{z}\, Z\left\{ \frac{1}{s} - \frac{1}{s+1} \right\}$$

$$G_{ho} G_o(z) = 10 \frac{z-1}{z} \left[ \frac{z}{z-1} - \frac{z}{z - e^{-T}} \right] = 10 \left[ 1 - \frac{z-1}{z - e^{-T}} \right], \; T = 1[s]$$

$$G_{ho} G_o(z) = 10 \left[ 1 - \frac{z-1}{z - e^{-1}} \right] = 10 \left[ 1 - \frac{z-1}{z - 0.3679} \right]$$

$$G_{ho} G_o(z) = 10 \cdot \frac{z - 0.3679 \cancel{- z} + 1}{z - 0.3679} \Rightarrow G_{ho} G_o(z) = \frac{6.3210}{z - 0.3679}$$

$$\cancel{G(z) = \frac{\frac{6.3210}{z - 0.3679} \cdot 5}{1 + \frac{6.3210}{z - 0.3679} \cdot 5 \cdot \frac{z}{z - 0.0368}}}$$

$$G(z) = \frac{\frac{6.3210}{z-0.3679} \cdot 5}{1 + \frac{6.3210}{z-0.3679} \cdot 5 \cdot \frac{z}{z-0.0368}}$$

$$G(z) = \frac{\frac{31.6050}{\cancel{z-0.3679}}}{\frac{z^2 - 0.4047z + 0.0135 + 31.6050z}{\cancel{(z-0.3679)}(z-0.0368)}} = \frac{31.6050(z-0.0368)}{z^2 + 31.2003z + 0.0135}$$

$$\boxed{G(z) = \frac{31.6050(z-0.0368)}{z^2 + 31.2003z + 0.0135}}$$

---

3. Дискретан систем представљен је моделом у простору стања.

$$X(k+1) = \begin{bmatrix} 0 & 1 \\ -2 & 3 \end{bmatrix} x(k) + \begin{bmatrix} 0 \\ 1 \end{bmatrix} u(k)$$

$$Y(k) = \begin{bmatrix} 0 & 1 \end{bmatrix} x(k)$$

Одредити ф-ју дискретног преноса система као и вриједности одбирака излазног сигнала $Y(k)$. Усвојити да је $x(0)=0$ и $u(k)=1$, период одмјеравања $T=1[s]$.

РЈЕШЕЊЕ:

$$X(k+1) = E\,x(k) + F\,u(k) \;/\; Z$$

$$z X(z) - z\underbrace{X(0)}_{0} = E X(z) + F U(z)$$

$$(zI-E)^{-1} \cdot / \; (zI - E) X(z) = F U(z)$$

$$X(z) = (zI - E)^{-1} F U(z)$$

Scanned with Car

$$Y(k) = C\,x(k) \,/\, z$$

$$Y(z) = C\,X(z)$$

$$Y(z) = C\,(zI - E)^{-1} F\,U(z)$$

$$G(z) = \frac{Y(z)}{U(z)} = C\,(zI - E)^{-1} F$$

$$G(z) = \begin{bmatrix} 0 & 1 \end{bmatrix} \left( \begin{bmatrix} z & 0 \\ 0 & z \end{bmatrix} - \begin{bmatrix} 0 & 1 \\ -2 & 3 \end{bmatrix} \right)^{-1} \begin{bmatrix} 0 \\ 1 \end{bmatrix} =$$

$$= \begin{bmatrix} 0 & 1 \end{bmatrix} \cdot \begin{bmatrix} z & -1 \\ 2 & z-3 \end{bmatrix}^{-1} \cdot \begin{bmatrix} 0 \\ 1 \end{bmatrix} = \begin{bmatrix} 0 & 1 \end{bmatrix} \cdot \frac{1}{\underbrace{z^2 - 3z + 2}_{(z-1)(z-2)}} \begin{bmatrix} z-3 & 1 \\ -2 & z \end{bmatrix} \begin{bmatrix} 0 \\ 1 \end{bmatrix} =$$

$$= \frac{1}{(z-1)(z-2)} \begin{bmatrix} 0 & 1 \end{bmatrix} \begin{bmatrix} 1 \\ z \end{bmatrix} \Rightarrow \boxed{G(z) = \frac{z}{(z-1)(z-2)}}$$

$$u(k) = 1/z,\ k \geq 0 \Rightarrow U(z) = \frac{z}{z-1}$$

$$Y(z) = G(z)\,U(z) = \frac{z^2}{(z-1)^2 (z-2)}$$

$$\frac{Y(z)}{z} = \frac{z}{(z-1)^2 (z-2)} = \frac{A}{(z-1)^2} + \frac{B}{(z-1)} + \frac{C}{(z-2)} =$$

$$= \frac{A(z-2) + B(z^2 - 3z + 2) + C(z^2 - 2z + 1)}{(z-1)^2 (z-2)}$$

$$\left.\begin{array}{l} B + C = 0 \Rightarrow B = -C \\ A - 3B - 2C = 1 \\ \underline{-2A + 2B + C = 0} \end{array}\right\} \Rightarrow \begin{array}{l} A - B = 1 \\ \underline{-2A + B = 0} \\ -A = 1 \Rightarrow A = -1,\ B = -2,\ C = 2 \end{array}$$

$$Y(z) = -\frac{z}{(z-1)^2} - \frac{2z}{(z-1)} + \frac{2z}{(z-2)}$$

Scanned with Car

$$Y(k) = Z^{-1}\{Y(z)\} = Z^{-1}\left\{-\frac{z}{(z-1)^2} - \frac{2z}{(z-1)} + \frac{2z}{(z-2)}\right\}$$

$$\boxed{Y(k) = -k - 2 + 2^{k+1}, \quad k \geq 0}$$

$$Y(1) = -1 - 2 + 2^{1+1} = 1$$

$$Y(2) = -2 - 2 + 2^{2+1} = 4$$

$$Y(3) = -3 - 2 + 2^{3+1} = 11$$

$$Y(4) = -4 - 2 + 2^{4+1} = 26$$

$$Y(5) = -5 - 2 + 2^{5+1} = 57$$

$$\vdots$$

Scanned with Car